COUNTERTOPS

STACKHOUSE

1004 HALCYON AVE.

Last Date Updated: 8/3/23

COLORS VARY WHEN VIEWED ON COMPUTER SCREEN OR PRINTED FROM THE ACTUAL SELECTION

Location:	**KITCHEN**		
Type:	QUARTZ	Edge:	STANDARD
Color:	LUMINA	Sink:	PER CLIENT - 33" UNDERMOUNT SINK
Fabricator:	MIDDLE TN GRANITE		
Notes:	NO SPLASH - AIR SWITCH		

Location:	**BUTLER'S PANTRY**		
Type:	QUARTZ	Edge:	STANDARD
Color:	LUMINA	Sink:	PER CLIENT - 17.5" UNDERMOUNT SINK
Fabricator:	MIDDLE TN GRANITE		
Notes:	NO SPLASH		

Location:	**POWDER BATH**
Notes:	PROVIDED PRE FAB VANITY

Location:	**BAR**		
Type:	QUARTZ	Edge:	STANDARD
Color:	LUMINA	Sink:	N/A
Fabricator:	MIDDLE TN GRANITE		
Notes:	CUSTOM SPLASH DESIGN - SEE BELOW		

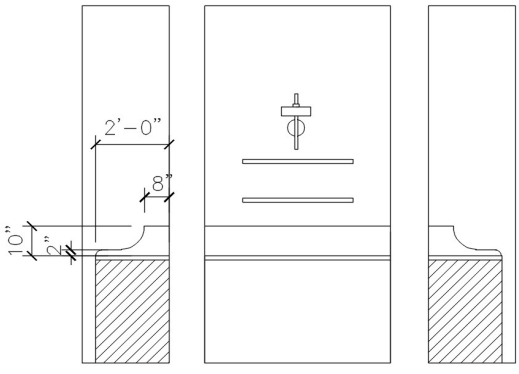

JL DESIGN

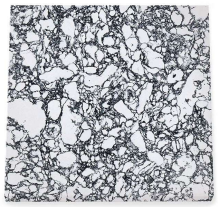

Location:	PRIMARY BATH		
Type:	QUARTZ	Edge:	STANDARD
Color:	ROSE BAY	Sink:	X2 - REC WHITE UNDERMOUNT SINK - 18"
Fabricator:	MIDDLE TN GRANITE		
Notes:	6" SPLASH		

Location:	MEDIA ROOM		
Type:	QUARTZ	Edge:	STANDARD
Color:	LIBERTY CALACATTA	Sink:	STAINLESS STEEL UNDERMOUNT SINK - 18"
Fabricator:	MIDDLE TN GRANITE		
Notes:	4" SPLASH		

Location:	BATH 2		
Type:	QUARTZ	Edge:	STANDARD
Color:	LIBERTY CALACATTA	Sink:	REC WHITE UNDERMOUNT SINK - 18"
Fabricator:	MIDDLE TN GRANITE		
Notes:	4" SPLASH		

Location:	BATH 3		
Type:	QUARTZ	Edge:	STANDARD
Color:	MORNING FROST	Sink:	REC WHITE UNDERMOUNT SINK - 18"
Fabricator:	MIDDLE TN GRANITE		
Notes:	4" SPLASH		

Location:	BATH 4		
Type:	QUARTZ	Edge:	STANDARD
Color:	MORNING FROST	Sink:	REC WHITE UNDERMOUNT SINK - 18"
Fabricator:	MIDDLE TN GRANITE		
Notes:	4" SPLASH		

Location:	BATH 5		
Type:	QUARTZ	Edge:	STANDARD
Color:	MORNING FROST	Sink:	REC WHITE UNDERMOUNT SINK - 18"
Fabricator:	MIDDLE TN GRANITE		
Notes:	4" SPLASH		

JL DESIGN

Location:	LAUNDRY		
Type:	QUARTZ	Edge:	STANDARD
Color:	MORNING FROST	Sink:	STAINLESS STEEL UNDERMOUNT SINK - 24"
Fabricator:	MIDDLE TN GRANITE		
Notes:	4" SPLASH		

PLEASE REFERENCE VENDOR PROVIDED SHEETS FOR ADDITIONAL INFORMATION